# ST4200 with Forked Contact Arm
# EXPLODED VIEW

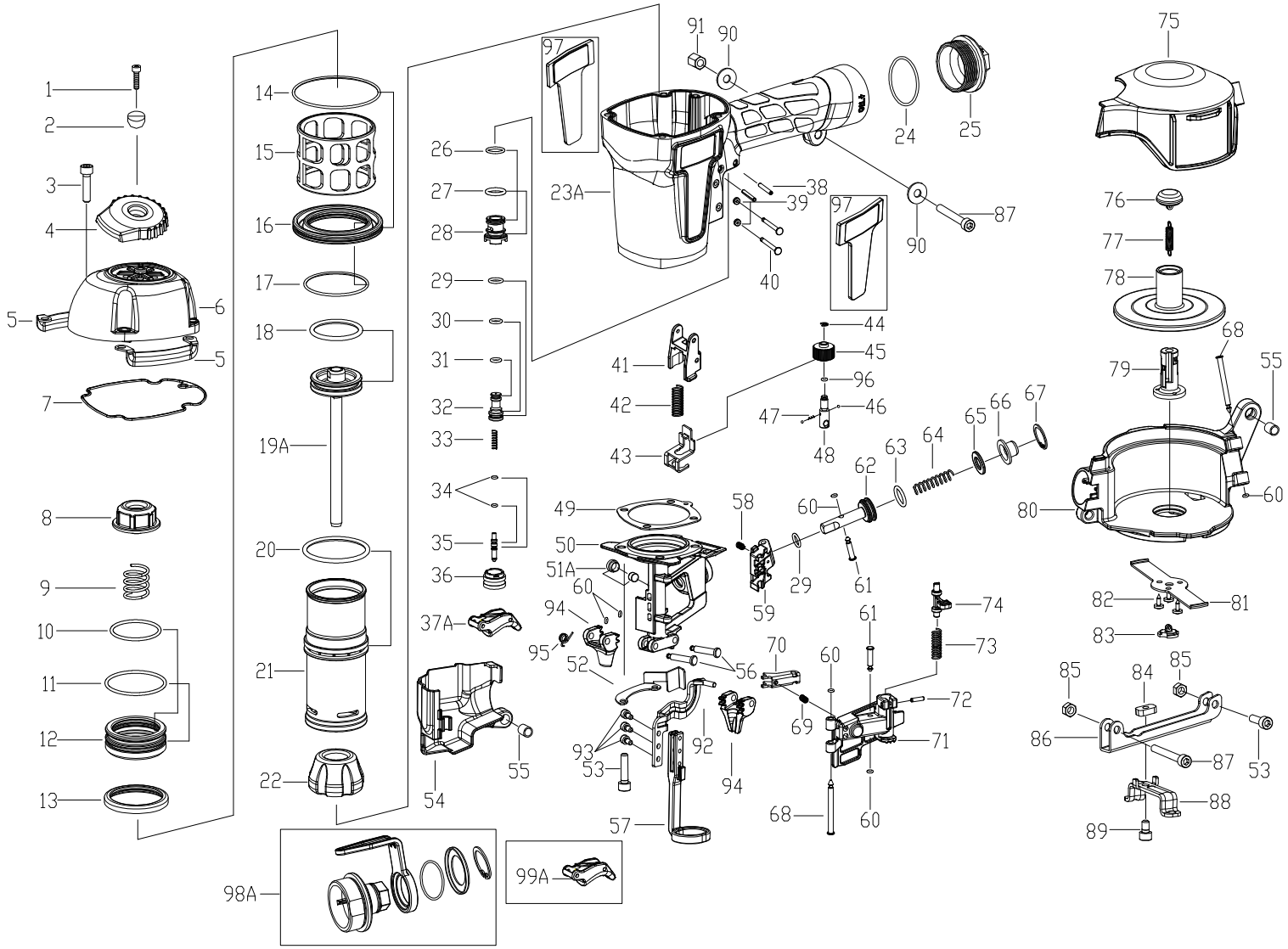

# ST4200 with Forked Contact Arm - P a r t s List

| Item No. | Part No. | Description | Q'ty |
|---|---|---|---|
| 1 | 32206140766 | Hex.Soc.Hd.Bolt | 1 |
| 2 | 20790000001 | Bushing,Deflector | 1 |
| 3 | 30106250866 | Hex.Soc.Hd.Bolt | 4 |
| 4 | 20790010115 | Deflector,Exhaust | 1 |
| 5 | 20750220001 | Guide Cover | 2 |
| 6 | 20790020227 | Cap | 1 |
| 7 | 20750130015 | Gasket,Cap | 1 |
| 8 | 20750140217 | Piston Stopper | 1 |
| 9 | 20970160100 | Spring | 1 |
| 10 | 30700110000 | O-Ring | 1 |
| 11 | 30700111000 | O-Ring | 1 |
| 12 | 20750150000 | Piston,Head Valve | 1 |
| 13 | 20750250117 | Seal | 1 |
| 14 | 30700112000 | O-Ring | 1 |
| 15 | 20790180116 | Cylinder Seal | 1 |
| 16 | 20750370000 | Cylinder Spacer | 1 |
| 17 | 30700113000 | O-Ring | 1 |
| 18 | 30700121000 | O-Ring | 1 |
| 19A | 22660462001 | Driver Assembly | 1set |
| 20 | 30700075000 | O-Ring | 1 |
| 21 | 20790350100 | Cylinder | 1 |
| 22 | 20750470115 | Bumper | 1 |
| 23A | 20750682229 | Body Assembly | 1set |
| 24 | 30700185000 | O-Ring | 1 |
| 25 | 20970740127 | End Cap | 1 |
| 26 | 30700079000 | O-Ring | 1 |
| 27 | 30700081000 | O-Ring | 1 |
| 28 | 20750900074 | Valve | 1 |
| 29 | 30700071000 | O-Ring | 2 |
| 30 | 30700024000 | O-Ring | 1 |
| 31 | 30700002000 | O-Ring | 1 |
| 32 | 20750910074 | Valve Plunger | 1 |
| 33 | 20770960001 | Spring | 1 |
| 34 | 30700080000 | O-Ring | 2 |
| 35 | 20770920000 | Plunger | 1 |
| 36 | 20770930016 | Plunger Cap | 1 |
| 37A | 20770952359 | Trigger Assembly-SEQ. | 1set |
| 38 | 30803240001 | Spring Pin | 2 |
| 39 | 30700078000 | Grommet | 2 |
| 40 | 20770890001 | Pin Trigger | 2 |
| 41 | 20972840415 | Guide, Contact Trip | 1 |
| 42 | 20771490001 | Spring, Safety | 1 |
| 43 | 20971480001 | Upper Safety Lever | 1 |
| 44 | 31303000001 | E-ring | 1 |
| 45 | 20771600066 | Adjusting Nut | 1 |
| 46 | 31200200000 | Ball,Steel | 2 |
| 47 | 20771630000 | Adjusting Spring | 1 |
| 48 | 807701601 | Adjusting Post Assembly | 1set |
| 49 | 20011070000 | Gasket | 1 |
| 50 | 22661130166 | Nose | 1 |
| 51A | 20973502100 | Magnet Bushing Assembly | 1set |
| 52 | 21591540001 | Guide,Safety Lever | 1 |
| 53 | 30106220766 | Hex.Soc.Hd.Bolt | 5 |
| 54 | 21501550015 | Safety Cover | 1 |
| 55 | 20011760001 | Bushing | 2 |

| Item No. | Part No. | Description | Q'ty |
|---|---|---|---|
| 56 | 21592340001 | Pin | 2 |
| 57 | 21501520466 | Safety Nose | 1 |
| 58 | 20971120001 | Spring | 1 |
| 59 | 22661180066 | Feed Pawl | 1 |
| 60 | 30700157000 | O-Ring | 6 |
| 61 | 20971170001 | Roll Pin | 2 |
| 62 | 20971140101 | Feed Piston | 1 |
| 63 | 30700072000 | O-Ring | 1 |
| 64 | 20971190012 | Feed Spring | 1 |
| 65 | 20971090017 | Feed Piston Bumper | 1 |
| 66 | 20971160101 | Feed Piston Cover | 1 |
| 67 | 32522000001 | C-ring | 1 |
| 68 | 20971270001 | Shaft Pin Nail Guide | 2 |
| 69 | 20971300001 | Spring | 1 |
| 70 | 22661200001 | Nail Stopper | 1 |
| 71 | 22661250066 | Nail Guide | 1 |
| 72 | 30803120001 | Spring Pin | 1 |
| 73 | 20971220001 | Spring,Lock Shaft | 1 |
| 74 | 20971230266 | Lock Shaft | 1 |
| 75 | 21501790015 | Magazine Cover | 1 |
| 76 | 20011770015 | Tension Post Bushing(Upper) | 1 |
| 77 | 20011820101 | Spring | 1 |
| 78 | 21501890015 | Nail Holder | 1 |
| 79 | 20011810015 | Adjust Post | 1 |
| 80 | 21501840015 | Magazine | 1 |
| 81 | 20971850001 | Magazine Guide | 1 |
| 82 | 32704080166 | Screw | 3 |
| 83 | 20011830015 | Tension Post Bushing | 1 |
| 84 | 20971870001 | Adjusting Nut | 1 |
| 85 | 30606100001 | Locknut | 2 |
| 86 | 20971860001 | Gauge Bracket | 1 |
| 87 | 30106300166 | Hex.Soc.Hd.Bolt | 2 |
| 88 | 20971880001 | Adjusting Plate | 1 |
| 89 | 30106120866 | Hex.Soc.Hd.Bolt | 1 |
| 90 | 30900003001 | Flat Washer | 2 |
| 91 | 32806100001 | Locknut | 1 |
| 92 | 22661510101 | Lower Safety Lever Assembly | 1 |
| 93 | 30104080166 | Hex.Soc.Hd.Bolt | 3 |
| 94 | 22663600066 | Jaw | 2 |
| 95 | 22663640001 | Spring | 1 |
| 96 | 30700136000 | O-Ring | 1 |
| | | **Optional Parts** | |
| 97 | 20750270015 | Anti-Skid-Grip | 2 |
| 98A | 20970832215 | Belt hook Assembly | 1set |
| 98A-1 | 20970740127 | End Cap | 1 |
| 98A-2 | 20970830115 | Belt hook | 1 |
| 98A-3 | 30700188000 | O-Ring | 1 |
| 98A-4 | 20970840001 | Cover,Belt hook | 1 |
| 98A-5 | 33425000001 | C-Ring | 1 |
| 99A | 20750952215 | Trigger Assembly-Bump | 1set |

ST4200#42661100800
9/10/2015